Bed

Assembly Instruction - Please keep properly for future reference.

If you find any missing boxes, damaged parts, or accessory shortages, please contact the customer service team of your purchasing channel immediately. We will resolve the issue as quickly as possible.

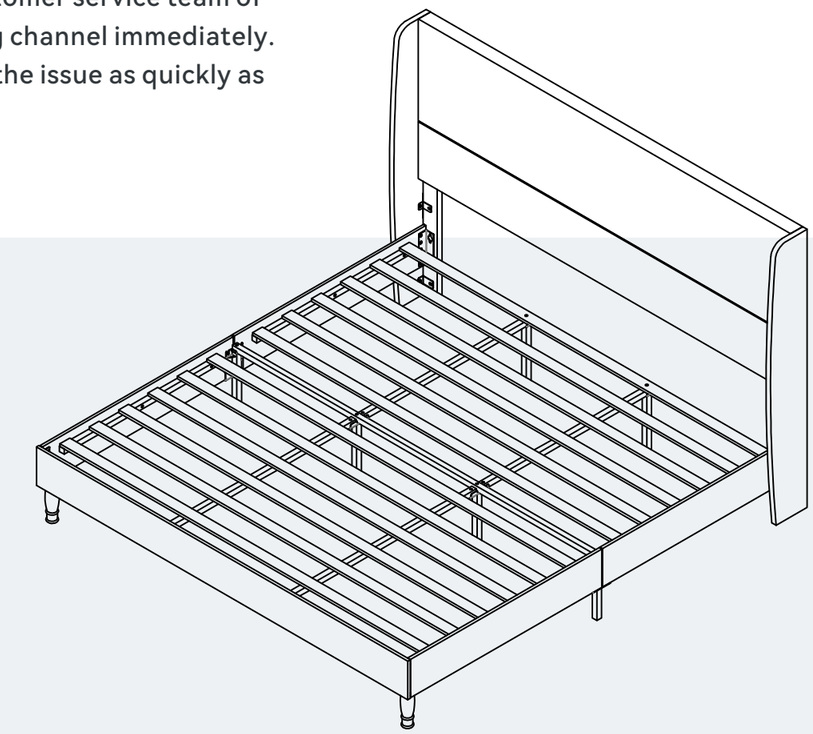

SKU:
C001984011
C001984012
C001984021
C001984022
C001984031
C001984032
C001984041
C001984042

V1.0

EN

CONTACT US

- **Email: service@grandtunnel.com**
  In order to receive assistance more quickly, please provide

THE FOLLOWING INFORMATION:

- Order number
- Purchase platform
- Purchase date
- Detailed description of the issue along with photos (if applicable)

Important – Please read these instructions carefully before starting the installation.

Bed

EN

Before Assembly

Thank you for choosing this product!
To ensure safe use and long-term maintenance, please read this manual carefully and keep it properly for future reference.

Packaging Notice:

1. Multi-Box Shipping Notice

This product is packaged in 2 separate boxes for shipping and may arrive in batches at different times. To ensure a smooth assembly process, please make sure all boxes are received before unpacking and starting the installation.

2. Box and Packaging Verification

Each box is labeled with a corresponding number. Please refer to the packing list on the next page of this manual to verify that all boxes have been received.

If you find any missing boxes, damaged parts, or accessory shortages, please contact the customer service team of your purchasing channel immediately. We will resolve the issue as quickly as possible.

Important Notice:

- To ensure a smooth and successful installation, please read this guide carefully. It provides essential information about the required tools, materials, and assembly steps. Follow the instructions in each section to avoid any issues caused by improper installation.
- Please review all operational and safety guidelines to ensure proper and secure assembly.
- This guide reflects the most current product information available at the time of printing. We reserve the right to make changes to product features, packaging, or availability without prior notice.
- Before starting assembly, ensure that all necessary electrical and environmental preparations are completed.
- This manual contains important instructions regarding installation, cleaning, and maintenance. Please read it thoroughly and keep it for future reference.

Safety Warnings

EN

1. Follow Warning Labels

Do not remove, alter, or obscure any warning labels on the product or packaging. Always adhere to the displayed safety instructions to ensure proper usage.

2. Conduct Regular Inspections

Periodically inspect all components to ensure they are properly installed, undamaged, and securely fastened. Report any issues to customer support immediately.

3. Practice Safe Usage

Avoid playing, jumping, or engaging in activities on or under the bed, as this may cause injury or structural damage.

4. Beware of Rope Hazards

Do not attach ropes, hooks, straps, or any non-designated accessories to any part of the bed, as this may pose a safety hazard.

5. Keep This Manual for Reference

Store this manual in a safe and accessible place for future reference.

6. Safety is a Shared Responsibility

Ensuring safety is a joint responsibility between the manufacturer and the user. Please follow all safety precautions during assembly and use.

Disclaimer

We are committed to delivering safe, high-quality, and reliable products to our customers. If you have any questions, concerns, or require further assistance, please contact our customer service team without hesitation.

Maintenance and Care Recommendations

1. Regular Cleaning

To maintain hygiene and prevent bacterial growth, clean the product regularly. Use a damp, well-wrung cloth to avoid excess moisture and prevent surface scratches.

2. Prevent Corrosion

Keep the product away from acidic or alkaline substances, as they may cause corrosion or damage to the materials.

3. Use Only Authorized Replacement Parts

Do not use unauthorized or third-party replacement parts, as they may compromise the product's safety and durability. If a replacement is needed, contact the manufacturer or an authorized dealer for approved parts.

4. Cleaning Precautions

Do not machine wash or rinse any part of the product directly with water, as this may damage the materials and reduce product lifespan.

5. Prevent Pests

Keep wooden furniture away from damp or humid areas to prevent pest infestations and wood damage. Use a dehumidifier or air conditioner during humid seasons to maintain a dry environment.

6. Protect from Sunlight

Avoid placing furniture in direct sunlight, as prolonged exposure may cause cracking, discoloration, or fading. If sunlight exposure is unavoidable, use curtains or shades to minimize damage.

7. Keep Away from Fire

Position furniture away from heat sources and open flames to prevent damage and maintain its condition.

8. Perform Regular Care

Apply furniture oil periodically to maintain the wood's shine, prevent cracks, and extend its lifespan.

9. Clean Frequently

Regularly vacuum dust and debris, especially underneath furniture, to keep it clean and hygienic.

10. Maintain a Dry Environment

Ensure good ventilation to prevent moisture buildup, which can damage wood. Use a dehumidifier if necessary to protect the furniture.

11. Avoid Corrosive Liquids

Keep furniture away from acidic or alkaline substances, as these can damage the surface and reduce durability.

12. Use a Damp Cloth for Cleaning

Wipe furniture with a well-wrung damp cloth to prevent water damage or swelling. Avoid excessive moisture exposure.

13. Limit Sun Exposure

Excessive sunlight can dry out and weaken wood. Position furniture in shaded areas or use UV-blocking curtains to protect it from damage.

Customer Service Guide

Thank you for choosing our product! We are committed to providing you with excellent service. If you find any missing parts, damaged packaging, or product damage after receiving all packages, please follow the steps below to quickly contact our customer service team. We will do our best to resolve your issue.

1. Missing Parts

Verify Parts:

1. Refer to the "Parts List" in the manual to verify the name, specifications, and quantity of the missing parts.
2. Take a clear photo of the parts list and mark the missing parts with detailed information, e.g., "Missing 5 pieces of M6×30mm screws."

Contact Us:

By Email:

Send an email to **service@grandtunnel.com**, with the subject line "Missing Parts Issue." Include the following in the email:

- A description of the missing parts and a photo of the parts list.
- Order details (order number, purchase platform, purchase date).

2. Product or Packaging Damage

If it affects normal use:

Steps:

1. Take clear photos or videos showing the damaged parts and the extent of the damage (multi-angle shots are recommended).
2. Email the photos/videos along with order details to **service@grandtunnel.com**, with the subject line "Product Damage Issue."

Resolution:

After verification, we will arrange for a replacement part, product exchange, or refund as quickly as possible.

If it does not affect normal use:

Steps:

1. Contact our customer service team (by email: **service@grandtunnel.com**).
2. Provide a description of the damage and include relevant photos or videos.

Resolution:

We will provide repair guidance or an appropriate compensation plan based on the specific situation.

Contact Us:

Customer Service Email: **service@grandtunnel.com**

Helpful Tips

To process your issue efficiently, please prepare the following information:

- Order details (order number, purchase platform, purchase date).
- Clear photos or videos.
- We are committed to providing quick and professional solutions, no matter the size of the issue, to ensure your satisfaction.

Thank you for your trust and support!
We hope you enjoy using our product!

Parts List

Box 1

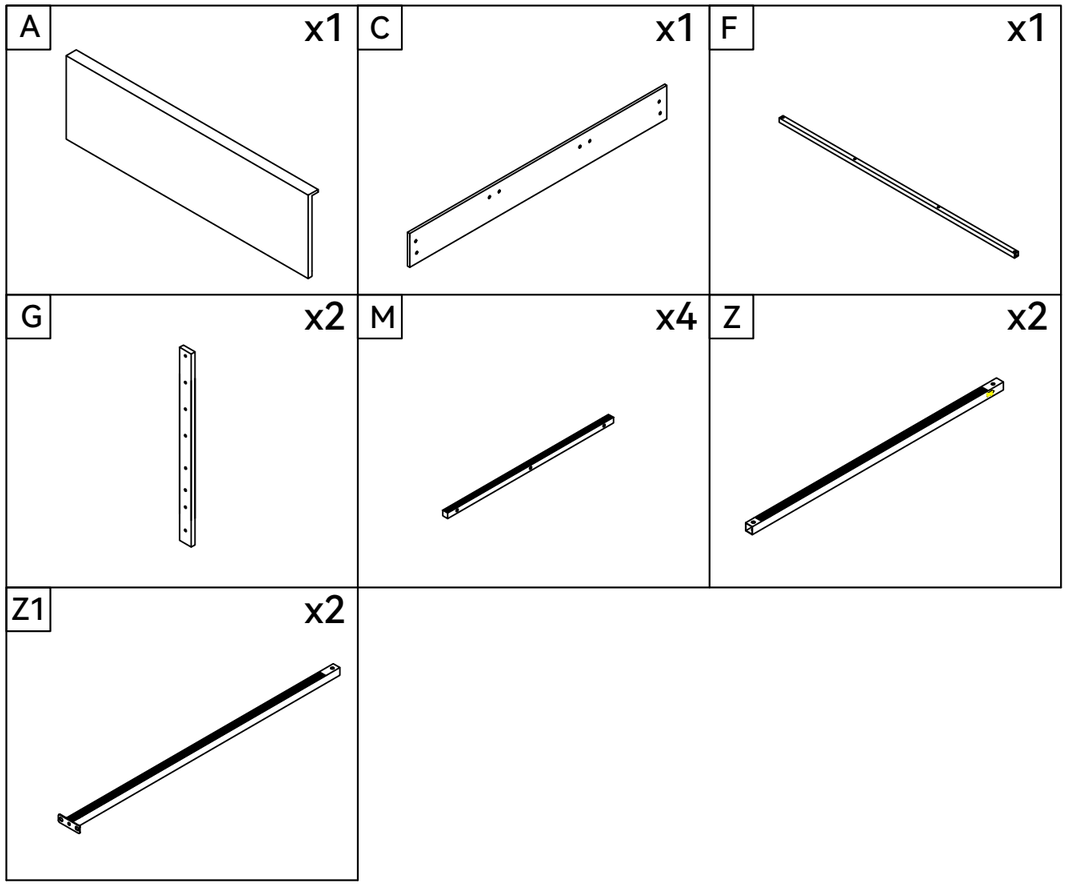

Hardware List (in Box 2)

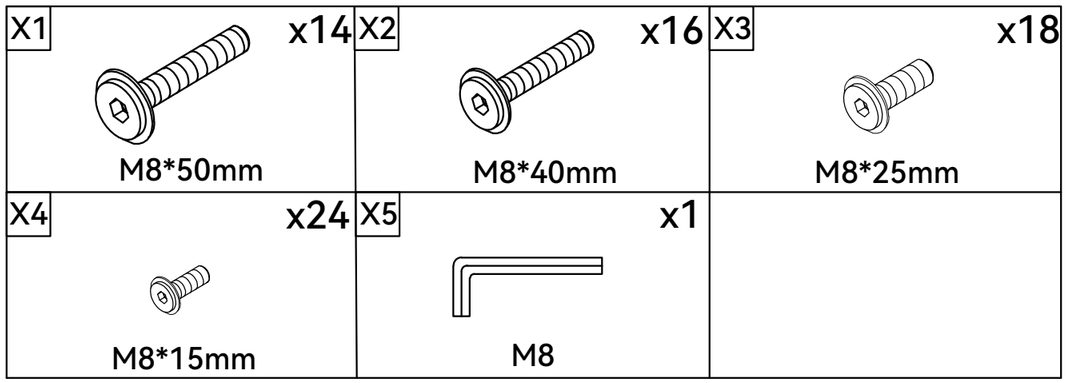

EN

Box 2

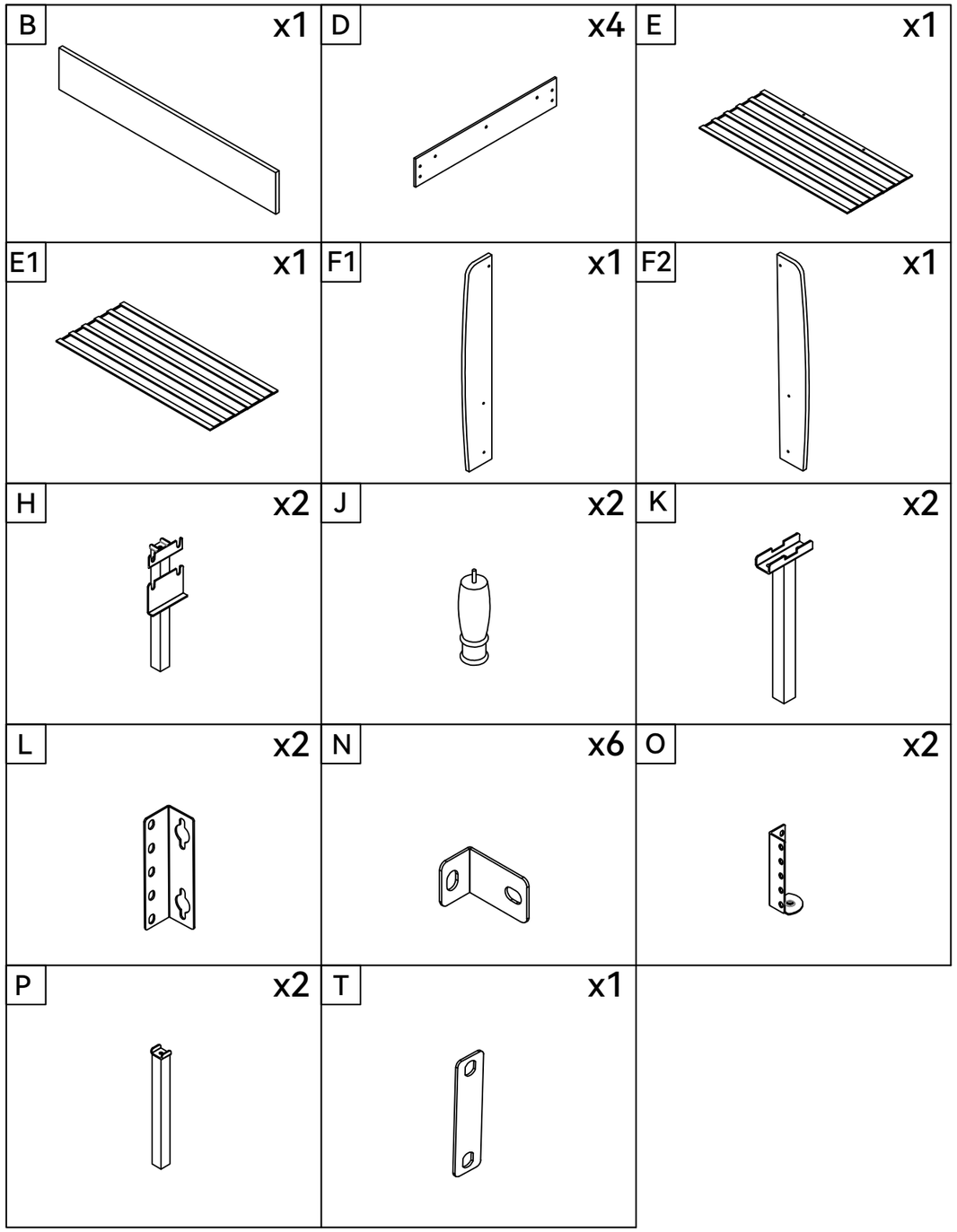

Email : **service@grandtunnel.com**

Assembly Instructions

EN

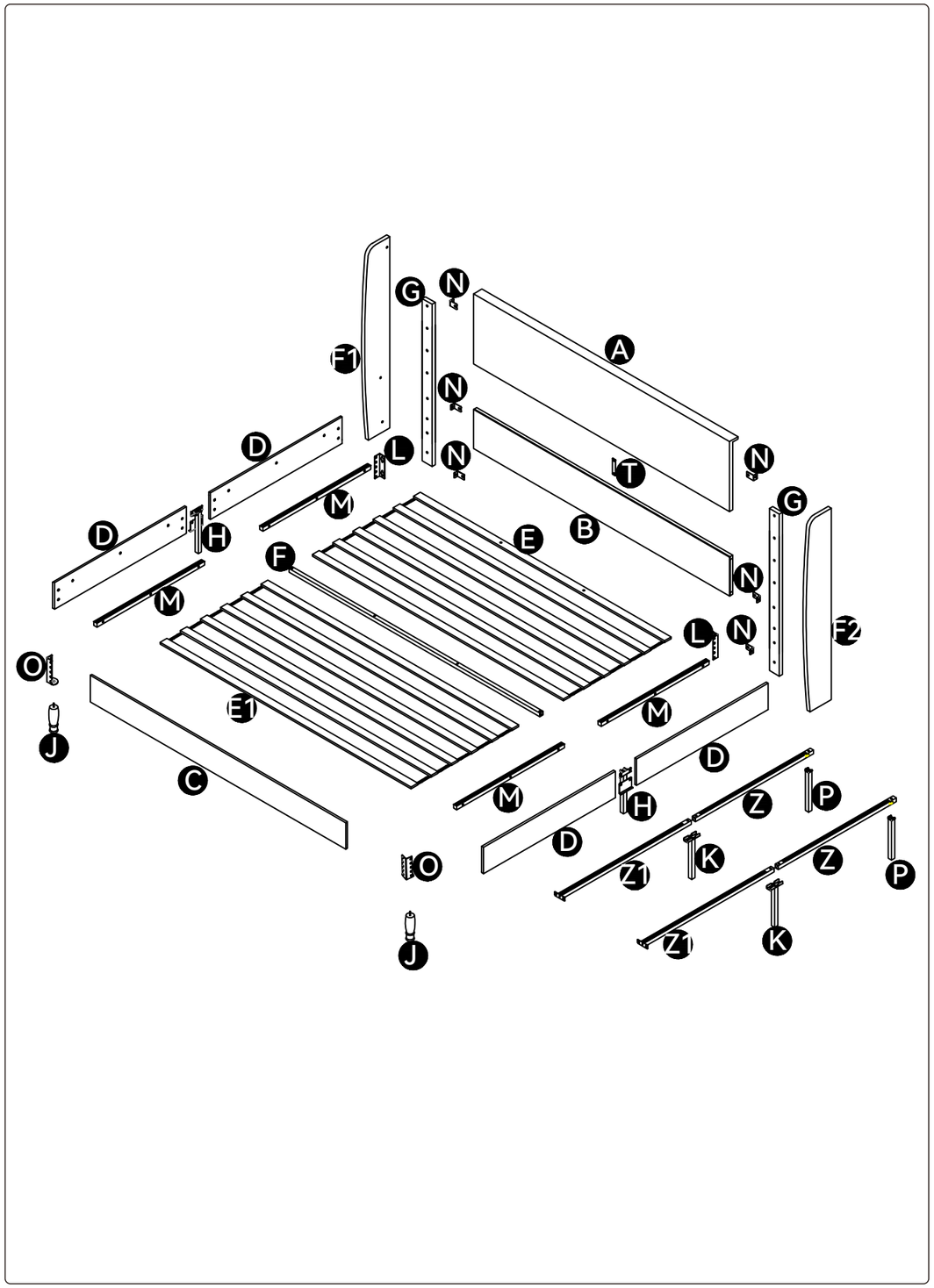

Email : **service@grandtunnel.com**

EN

Step 1

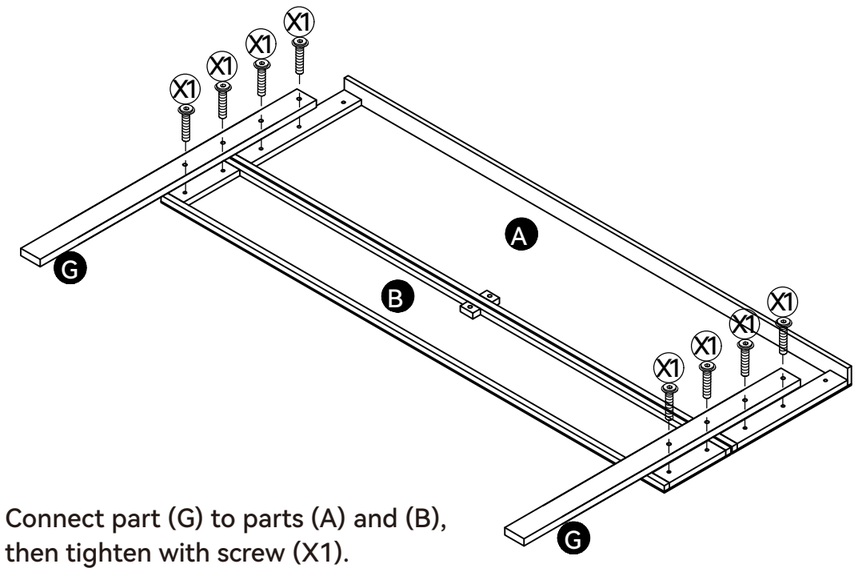

Connect part (G) to parts (A) and (B), then tighten with screw (X1).

X1	
x8	M8*50mm

Step 2

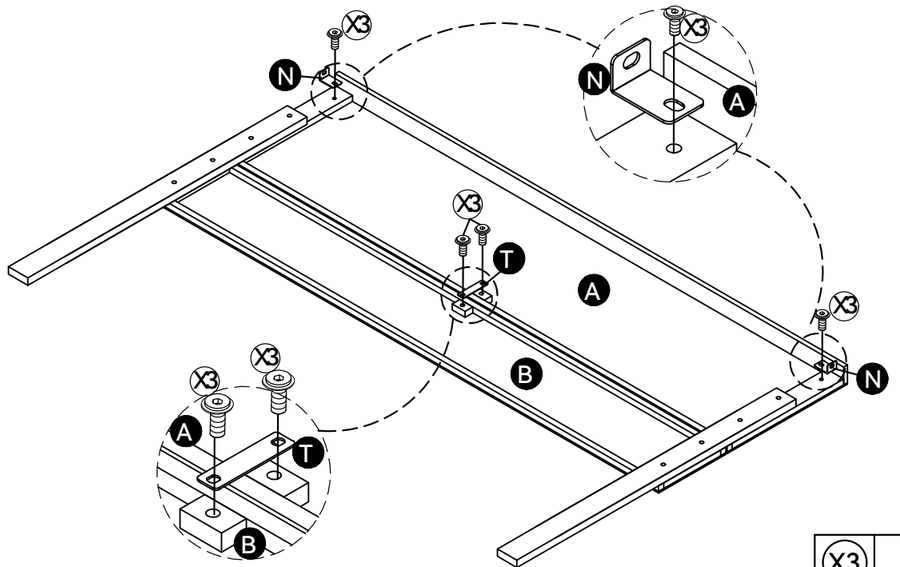

1. Connect part (N) to part (A), then tighten with screw (X3).
2. Connect part (T) to parts (A) and (B), then tighten with screw (X3).

X3	
x4	M8*25mm

Email : **service@grandtunnel.com**

Step 3

1. Connect part (N) to part (G), then tighten with screw (X3).
2. Tighten screw (X3) on part (G) to 70% tightness.

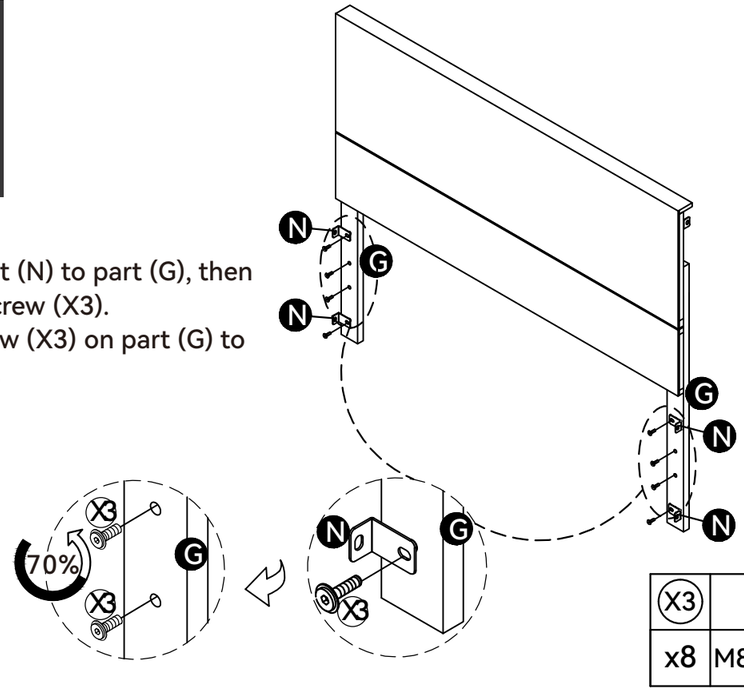

X3	
x8	M8*25mm

Step 4

Install parts (F1) and (F2), then tighten screw (X3) to 70% tightness.

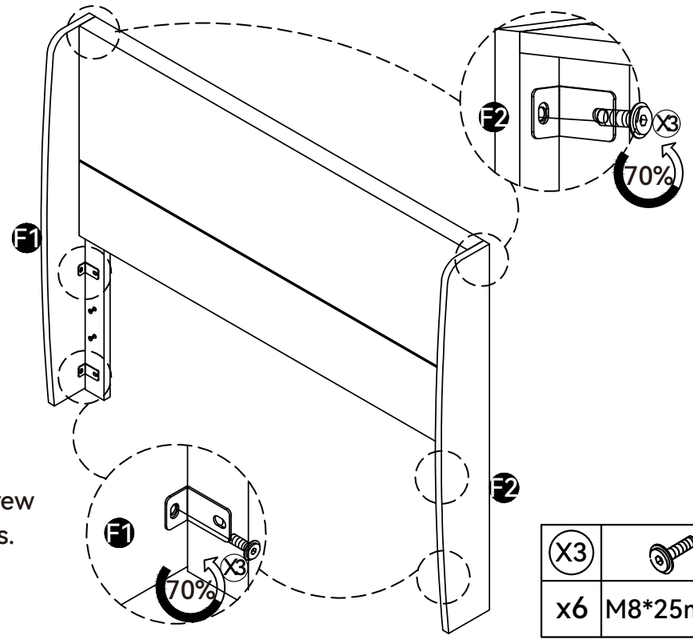

X3	
x6	M8*25mm

Email : **service@grandtunnel.com**

EN

EN

Step 5

Connect part (H) to part (D), then tighten with screw (X4).

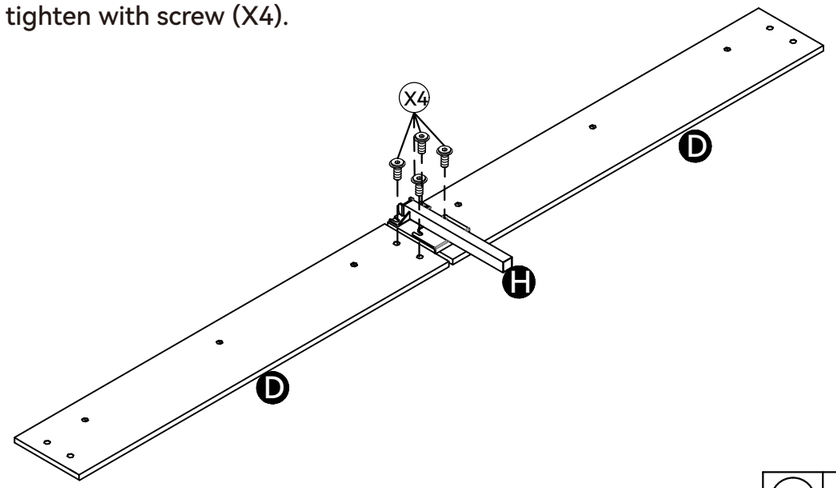

x2

X4	
x8	M8*15mm

Step 6

Connect part (L) to part (D). As shown in the diagram, align with the second and fourth holes, then tighten with screw (X4).

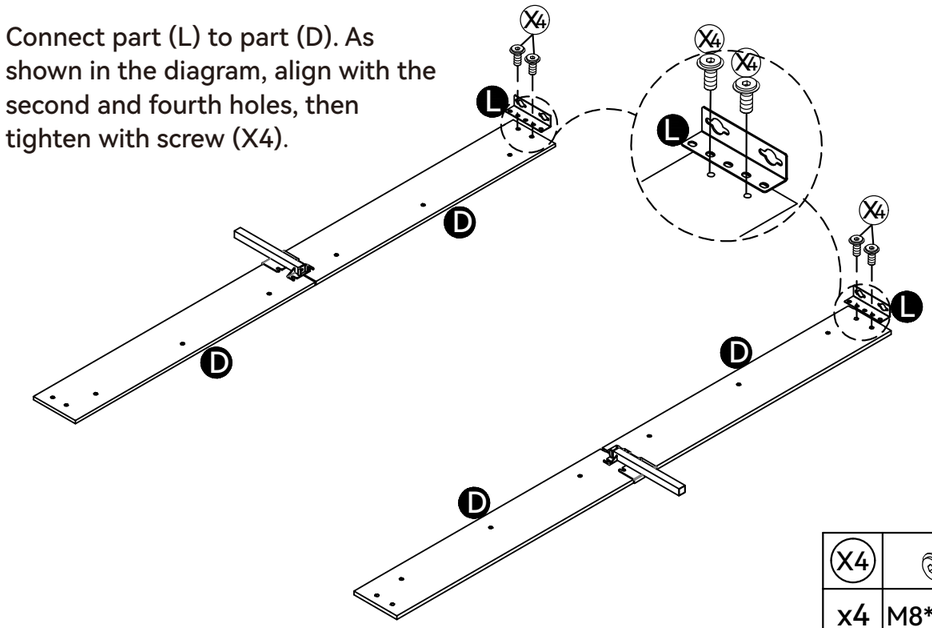

X4	
x4	M8*15mm

Email : **service@grandtunnel.com**

Step 7

Connect part (O) to part (D). As shown in the diagram, align with the second and fourth holes, then tighten with screw (X4).

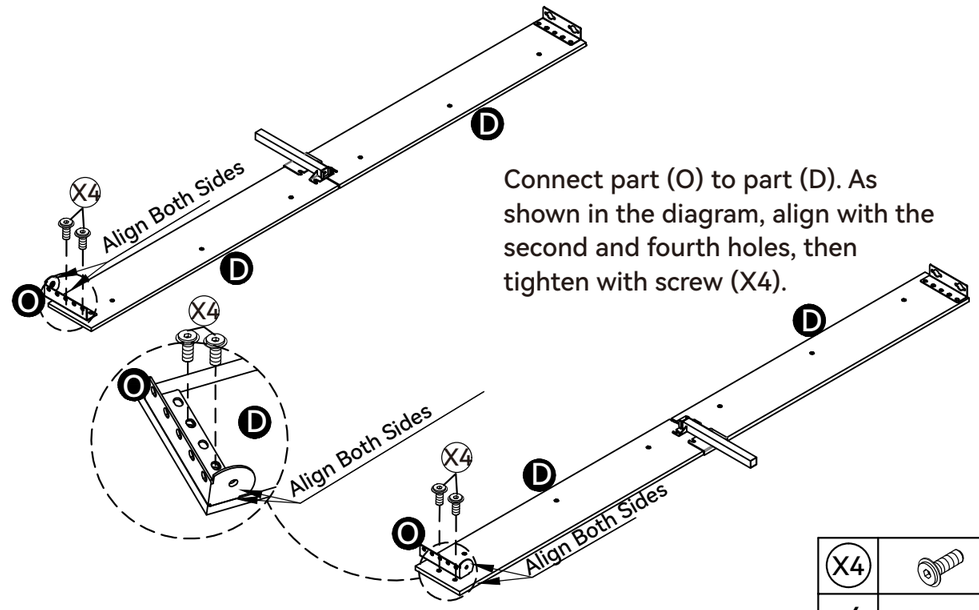

X4	
x4	M8*15mm

EN

Step 8

Connect part (J) to part (O), then tighten securely.

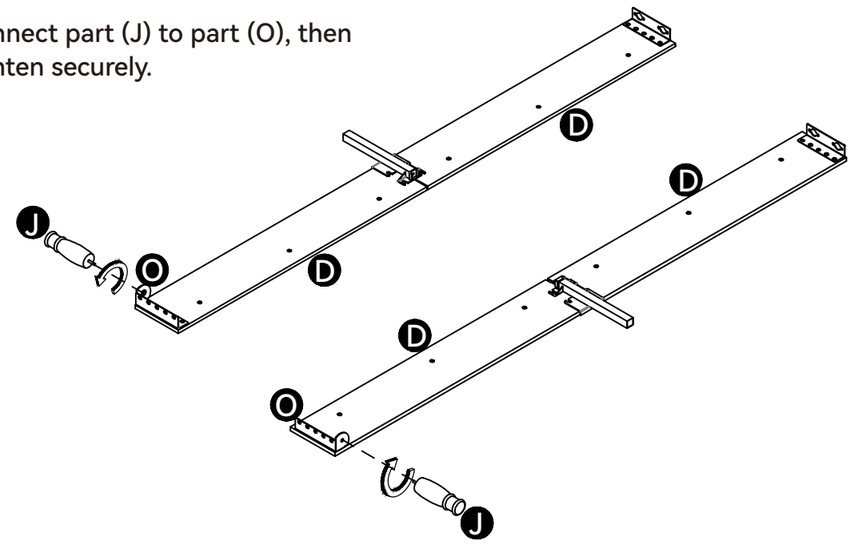

Email : **service@grandtunnel.com**

EN

Step 9

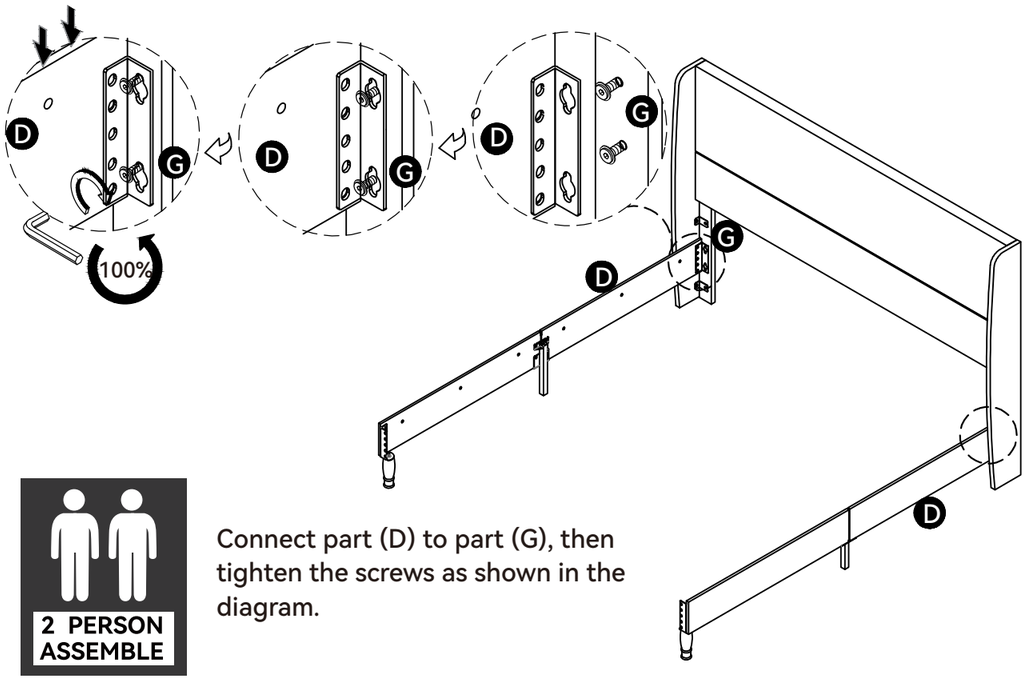

2 PERSON ASSEMBLE

Connect part (D) to part (G), then tighten the screws as shown in the diagram.

Step 10

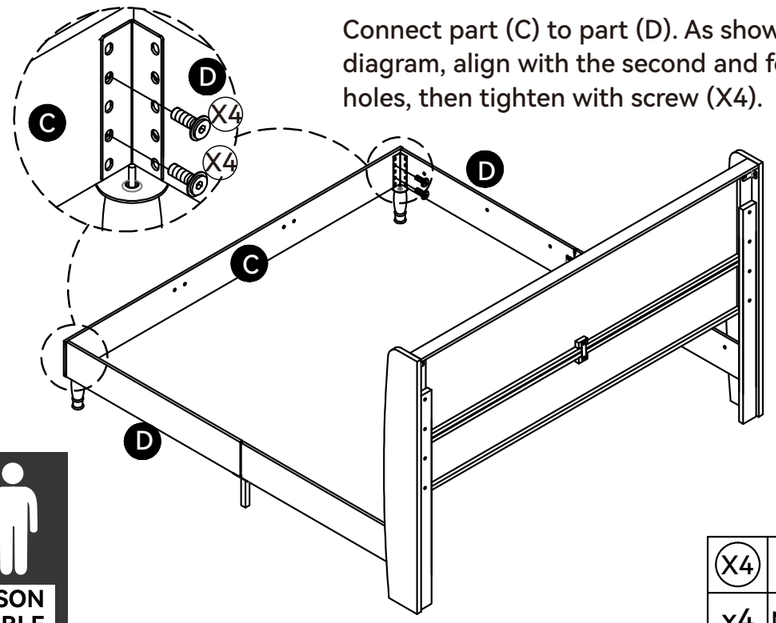

Connect part (C) to part (D). As shown in the diagram, align with the second and fourth holes, then tighten with screw (X4).

2 PERSON ASSEMBLE

X4	
x4	M8*15mm

Email : **service@grandtunnel.com**

Step 11

Connect part (M) to part (D), then secure with screw (X2).

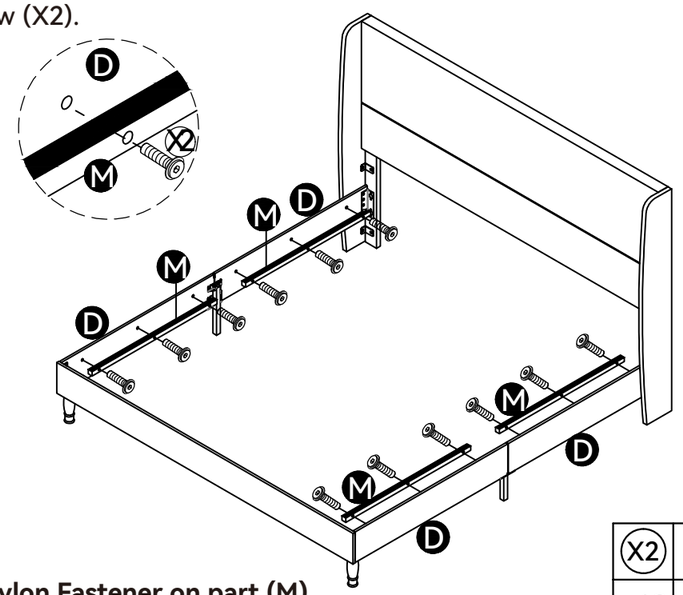

NOTE:
Make sure the Nylon Fastener on part (M) is facing upward during installation.

X2	
x12	M8*40mm

Step 12

Connect part (K) to parts (Z) and (Z1), then tighten with screw (X2).

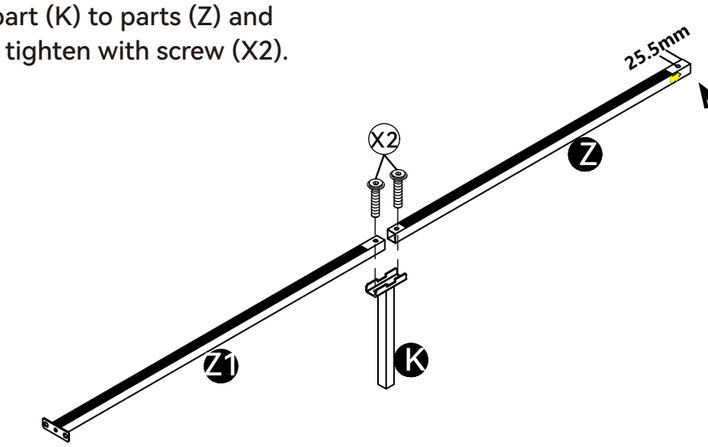

Note: Ensure the end cap faces outward.

x2

X2	
x4	M8*40mm

Email : **service@grandtunnel.com**

EN

EN

Step 13

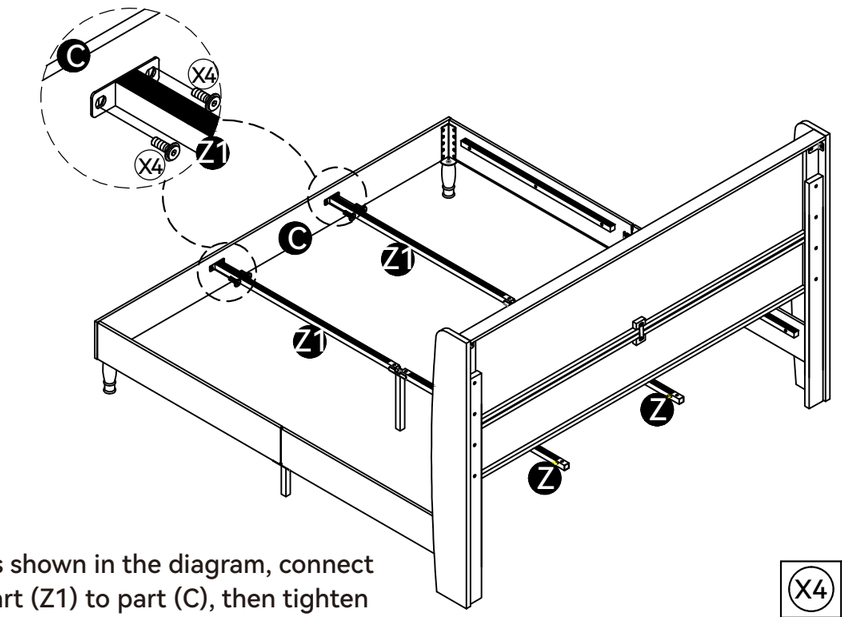

As shown in the diagram, connect part (Z1) to part (C), then tighten with screw (X4).

X4	
x4	M8*15mm

Step 14

Install part (F) by connecting it to parts (H) and (K), then tighten with screw (X1).

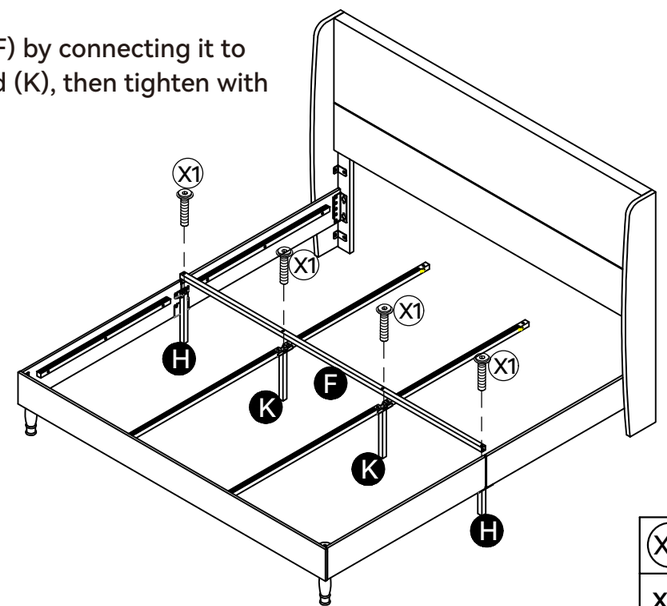

X1	
x4	M8*50mm

Email : **service@grandtunnel.com**

Step 15

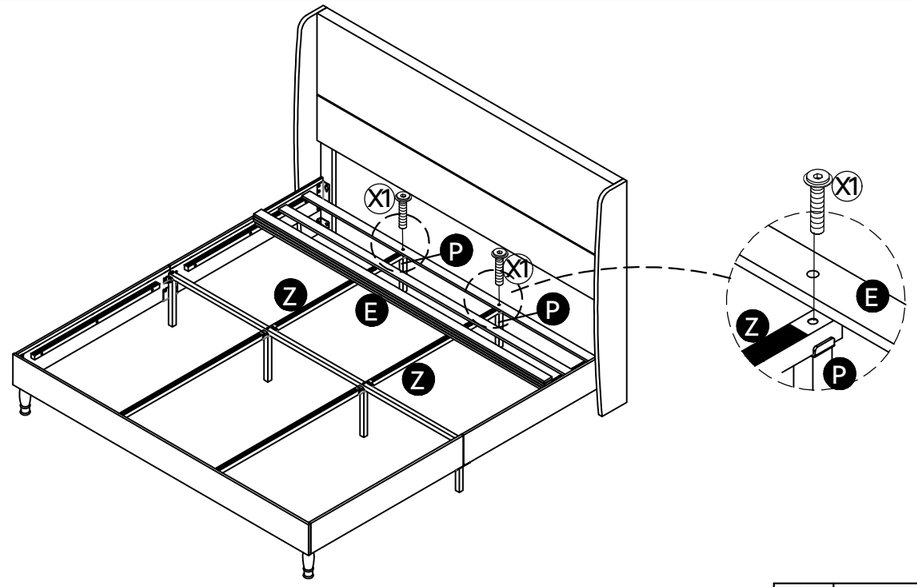

As shown in the diagram, connect parts (E) and (P) to part (Z), then tighten with screw (X1). Make sure the perforated slat on part (E) faces the headboard during installation.

X1	
x2	M8*50mm

Step 16

1. Unfold parts (E) and (E1), then attach them to part (M).
2. The bed assembly is now complete. Make sure all screws are fully tightened.

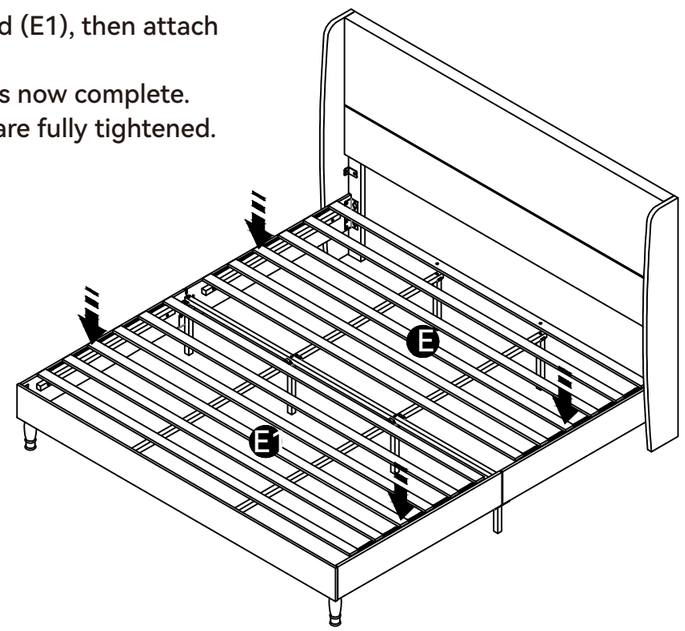

Email : **service@grandtunnel.com**

EN